Aqua Creek Products
The Leaders of Recreation, Fitness and Ability!
9889 Garrymore Ln
Missoula, MT 59808
888-687-3552 | +1-406-549-0769
aquacreek.com

Scout 2 Pool Lift

PART #: F-800SC2 (with anchor)
PART #: F-802SC2 (without anchor)
US PATENT NUMBER: [D507,769 S]
375 LB. [170 kg] MAXIMUM WEIGHT CAPACITY

MANDATORY
LEAVE THIS MANUAL WITH LIFT OWNER

Read and follow all instructions
Lift safety can only be ensured if the lift is installed and operated according to these instructions.

- NEVER permit children to play on or around the lift
- Do not allow children to use the lift without adult su-perivsion
- NEVER apply direct water pressure to the electronics
- NEVER use the lift with a dry pool
- For safety reasons, NEVER swim alone

ADA COMPLIANT

Inspected And Verified To Meet Applicable Sections of ADA Guidelines Section 1009.2 By
wyle laboratories
A Registered ISO 9001 Laboratory

READ CAREFULLY

Check entire box and inside all packing materials for parts. Before beginning assembly, read the instructions and identify parts using the figures and parts listed in this document.

It is critical all parts be carefully inspected by the installer prior to installation to ensure no damage occurred in transit and a damaged part is not used. If any damage occurred in transit, Aqua Creek Products, LLC must be notified within three days of receipt of unit.

Proper installation cannot be overstressed, as an improper installation voids Aqua Creek's warranty and may affect the safety of the user.

Copyright © 2016 Aqua Creek Products All Rights Reserved
Revised 1/28/16

Scout 2 Lift

Table of Contents

PAGE	DESCRIPTION	PAGE	DESCRIPTION
2	Scout 2 Components	10	Basic Troubleshooting
3	ADA Installation Guidelines	11	Proper Care of Pool & Spa Lifts
4-5	Anchor Installation: Core-Drill Retro-Fit	12	Scout 2 Parts List
6	Anchor Installation: Saw-Cut Retro-Fit/ New Construction	13	Seat Assembly Parts List
7-9	Scout 2 Lift Assembly Instructions	14	Warranty

Scout 2 Components

1. THE SCOUT 2 LIFT MAIN ASSEMBLY
2. CONTROL ARM
3. LIFTING ARM
4. ADJUSTABLE SEAT ARM
5. FOOTREST
6. ACTUATOR
7. HANDSET
8. 24 V BATTERY

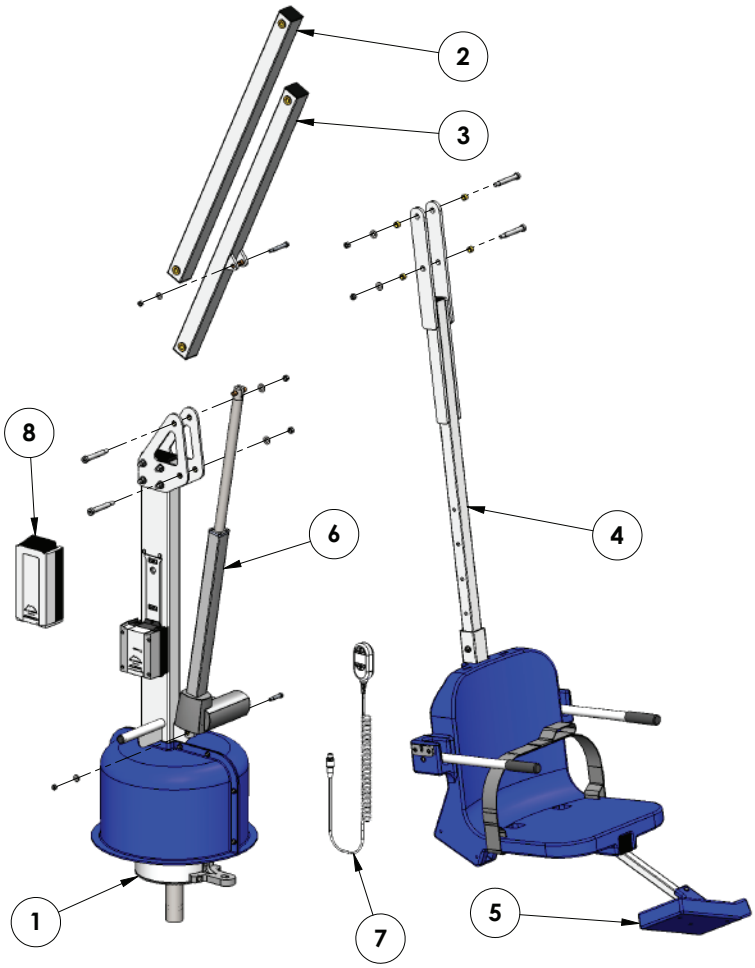

Copyright © 2016 Aqua Creek Products All Rights Reserved

Installation: ADA Guidelines

ADA REQUIREMENTS (For Commercial Applications):

The Scout 2 Lift is completely ADA Compliant when installed correctly. The installation must meet the following requirements:

- Clear deck space dimensions (see FIGURE 1)
- Install lift a minimum of 19" from the pool edge (For curved pool walls contact Aqua Creek for placement)
- Deck slope no greater than 1:48
- The seat must be submerged at least 18" into the water. The lift should be installed at a location with 42"-48" of depth (deck to pool floor)

NOTE: Other requirements may be necessary based on local code requirements. The anchor system should be bonded according to NEC Section 680 and/or local code requirements.

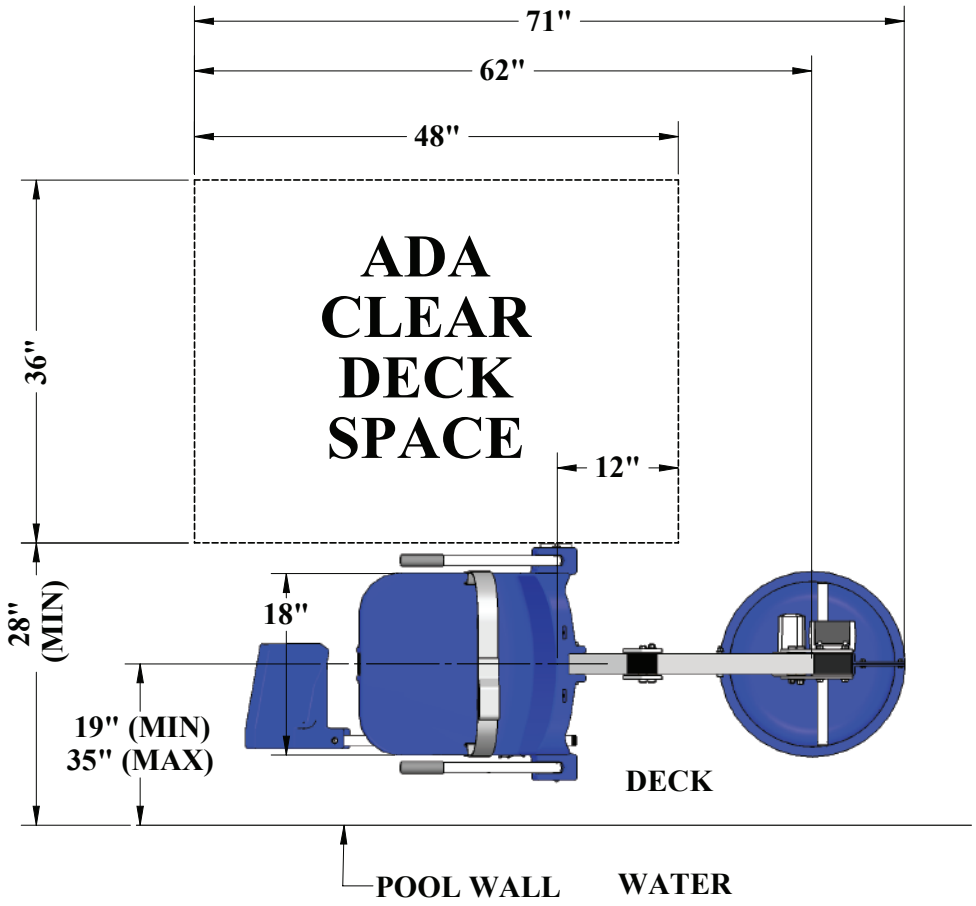

FIGURE 1

Copyright © 2016 Aqua Creek Products All Rights Reserved

Anchor Installation: Core-drill Retro-fit
(Typical Concrete Pool Deck Installation)

Your deck MUST have:
- **Minimum footing size: 3' - 9" x 3' - 9" x 10" thick.**
- **Minimum concrete strength: 2500 psi**
- **Reinforcement: #4 rebar @ 10" on center (O.C.)**

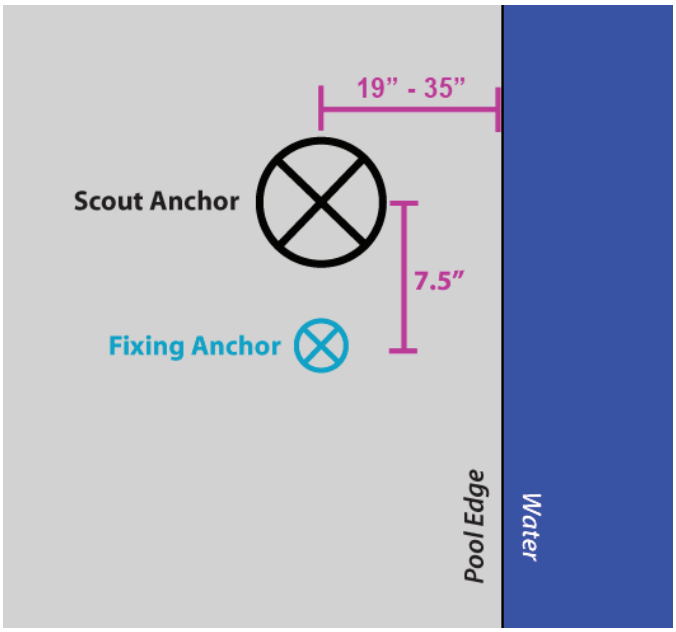

TOOLS REQUIRED:

CORE DRILL	MARKING PEN
3" CORE DRILL BIT	AIR NOZZLE & PUMP/COMP.
1 1/2" CORE DRILL BIT	HEAT GUN (OPTIONAL)
EPOXY (ANCHOR ADHESIVE)*	MASKING TAPE

*Use HILTI RE-500-SD adhesive anchor or SIMPSON SET-XP anchor adhesive or equivalant.

NOTE: Your local codes may require one or more permits. Check with your local building codes for the proper permit requirements.

1. Mark the center of the anchor location on your deck using the guidelines on page 3. Also mark the center for the fixing anchor 7 1/2" from the center anchor.

2. Using a 3" diameter core-drill bit, drill a 3" diameter hole at the anchor location. Make sure to keep the bit square to the deck. Drill straight down to a depth of at least 6". Then use a 1 1/2" drill bit for the fixing anchor, drilling down at least 4"

NOTE: Create a depth marker on the drill bit with black electrical tape to make sure you drill to the right depth. If you drill through the deck you may need to use the saw-cut installation instructions.

3. Remove plug and clean out the holes with a wire brush. Insert an air nozzle to the bottom of the hole. Use a pump or compressed air to blow out the hole. A heat-gun may be helpful in drying out the hole.

continued on page 5

Copyright © 2016 Aqua Creek Products All Rights Reserved

Anchor Installation: Core-drill Retro-fit (CONTINUED)

4. Place the anchor in the hole and 'dry-fit' it first to make sure the anchor will be flush and plumb with the finished deck surface when installed. Adjust the hole as needed.

NOTE: Pool decks with pavers or thick tiles may require other anchor options. Contact Aqua Creek Products.

5. Inject epoxy adhesive into each hole starting at the bottom until the hole is 1/3 to 1/2 full.

NOTE: We recommend using masking tape around the top of the anchors so that no epoxy gets inside the anchors.

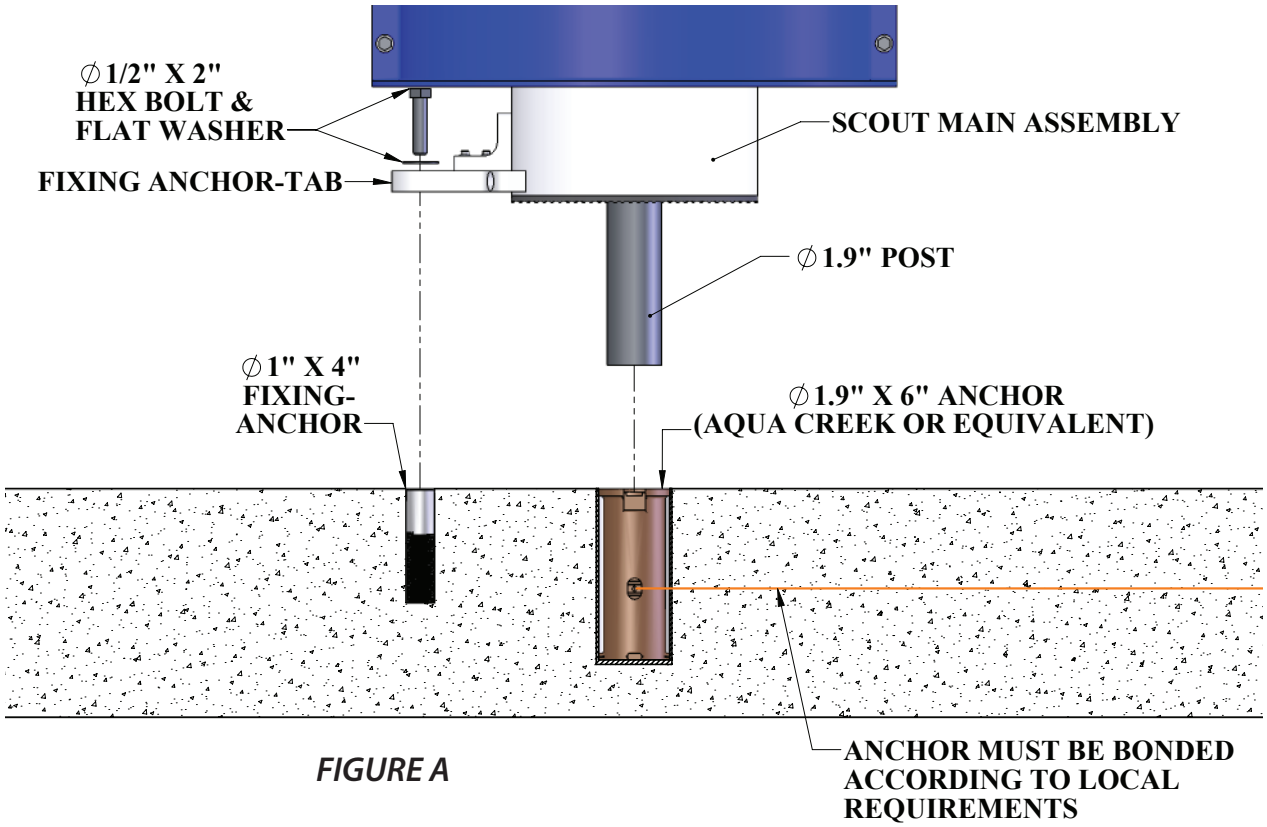

FIGURE A

6. Install the anchor into the epoxy filled hole by pushing down and twisting back and forth to evenly distribute the epoxy around the anchor. Push down until it is flush with the finished deck surface. Clean off any excess epoxy. Adjust the anchor as needed to make sure it is flush and plumb with the deck surface. This should be done during the adhesives' specified 'gel time' (see epoxy manufacturers' instructions).

7. Let the epoxy cure for at least 24 hours before installing the lift (or where applicable according to the epoxy manufacturers' instructions).

Copyright © 2016 Aqua Creek Products All Rights Reserved

Anchor Installation:
Saw-cut Retro-fit/New construction

1. Mask the bottom hole of the anchor sleeve to prevent concrete from seeping in.

2. Install rebar in the 3'-9" x 3'-9" section of the deck that will be thickened to 10". SEE FIGURES B & C.

3. Set the bronze anchor sleeve in place. Make sure the center of the anchor sleeve is no more than 36" from the pool's edge. Set the fixing anchor insert 7 1/2" from the center of the anchor sleeve. Fixing anchor may be located anywhere on the deck, as long as it is 7 1/2" from the center of the anchor sleeve. SEE FIGURE B.

4. Bond the anchor sleeve according to your local code requirements by using the bonding lug and bonding screw on the side of the anchor sleeve.

5. Pour your concrete and finish the pool deck surface.

6. Once the concrete has cured, your lift is ready to be mounted into the anchor sleeve.

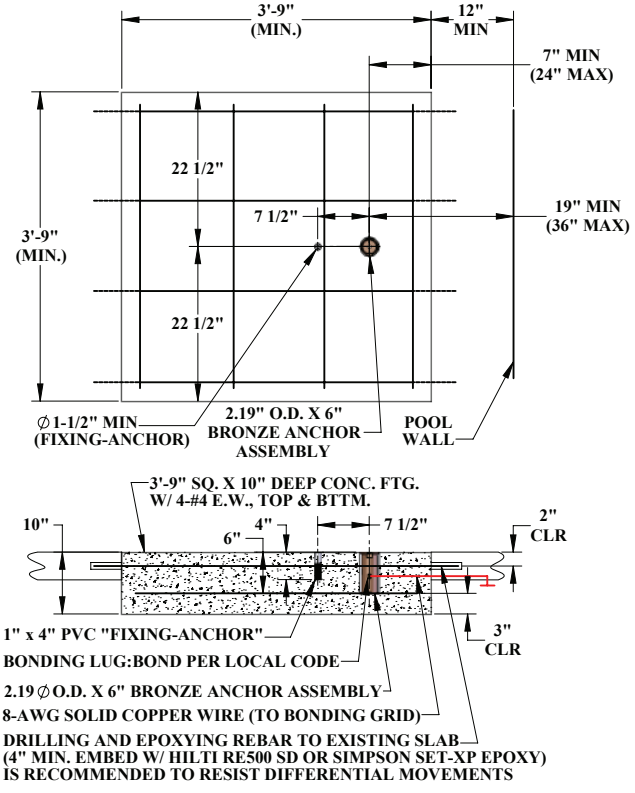

FIGURE B

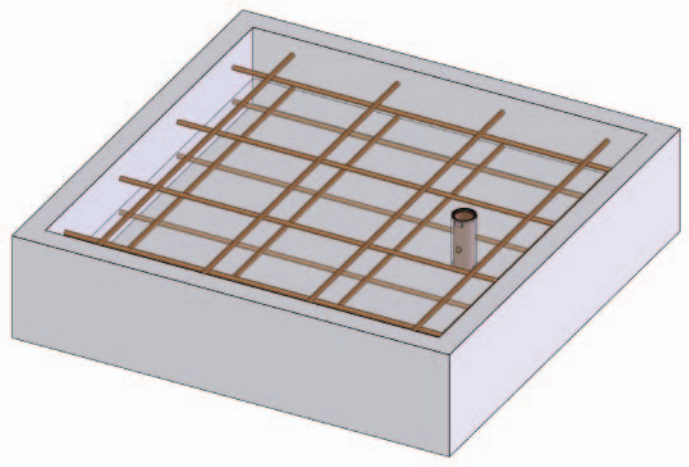

FIGURE C

Copyright © 2016 Aqua Creek Products All Rights Reserved

Scout 2 Assembly Instructions

TOOLS REQUIRED:

1/2" WRENCH
9/16" WRENCH
3/4" WRENCH
3/16" ALLEN WRENCH
1/4" ALLEN WRENCH

WARNING: NEVER LIFT THE MAIN ASSEMBLY USING THE LINEAR ACTUATOR AS A HANDLE! USE AT LEAST TWO PEOPLE TO LIFT. USE A TRANSPORT CART IF AVAILABLE.

1. Lift the Scout MAIN ASSEMBLY from the shipping container. Insert the 1.9" [48mm] post of the MAIN ASSEMBLY into the deck anchor (FIGURE A, PAGE 5). Ease the MAIN ASSEMBLY down until it rests on the deck surface. Rotate the base until the fixing anchor-tab lines-up with the fixing anchor. Install the 1/2" x 2" hex bolt and washer to hold down the lift. Tighten the bolt.

2. Remove the shipping strap and all packing from the ACTUATOR. Connect the LIFTING ARM between the mast and the ACTUATOR (FIGURE D). Tighten nylock nuts (PHOTO 1 & PHOTO 2).

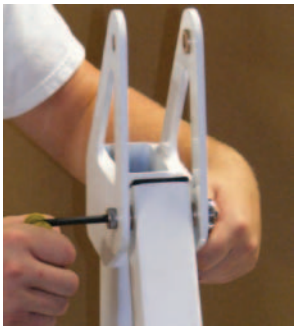

PHOTO 1

PHOTO 2

PHOTO 3

NOTE: Be careful not to over-tighten bolts. Over-tightening can cause damage and compromise the safety of your lift.

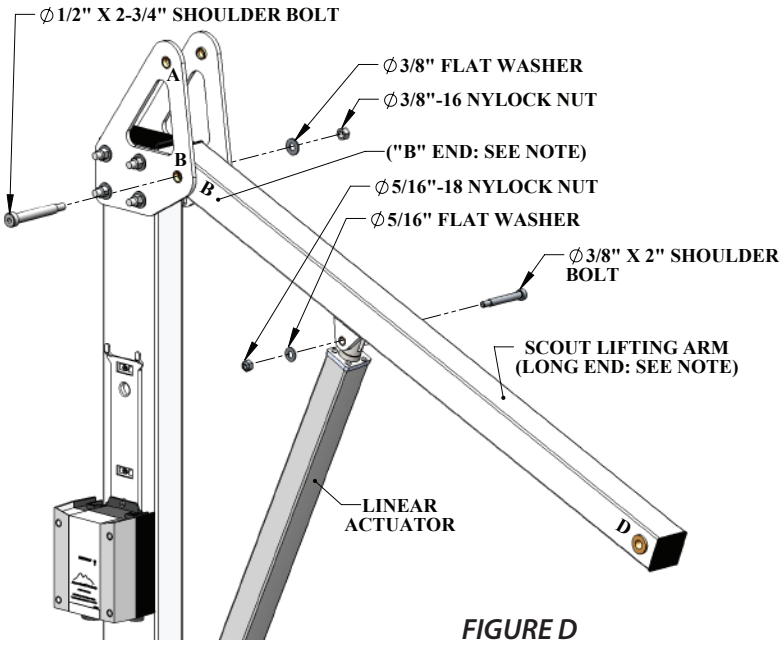

FIGURE D

NOTE: The LIFTING ARM is easily flipped around the wrong way. Make sure the end marked "B" is towards the mast, as shown.

Copyright © 2016 Aqua Creek Products All Rights Reserved

Scout 2 Assembly Instructions (cont.)

3. Install the CONTROL ARM ("A" END) onto the mast as shown in FIGURE E. Tighten the nylock nut (PHOTO 3, PAGE 7).

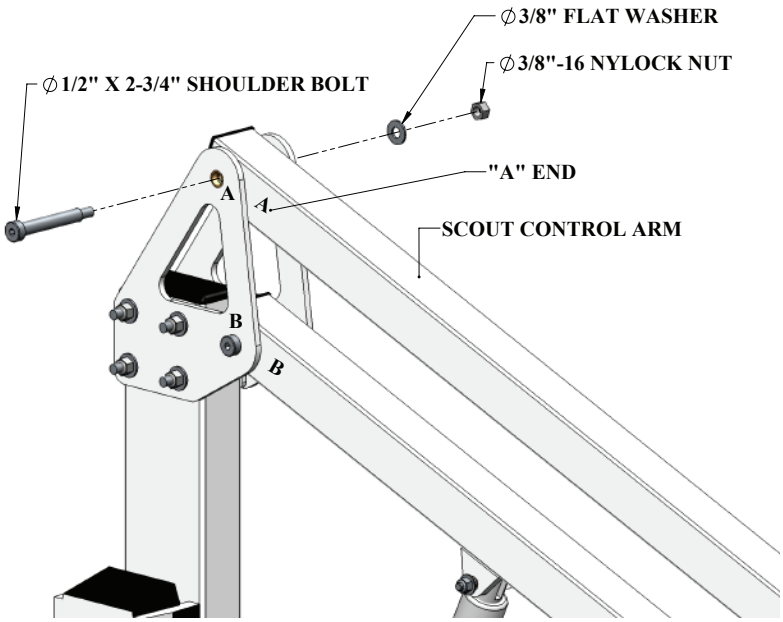

FIGURE E

4. Install the CHAIR ARM at the ends of the LIFTING ARM and CONTROL ARM (FIGURE E). Tighten the nylock nuts (PHOTOS 4 & 5).

NOTE: Make sure the letters match up; with the chair facing away from the main assembly.

NOTE: Flip the CONTROL ARM (upper arm) out of the way while the LIFTING ARM (lower arm) is attached first (this makes it easier to line-up the holes).

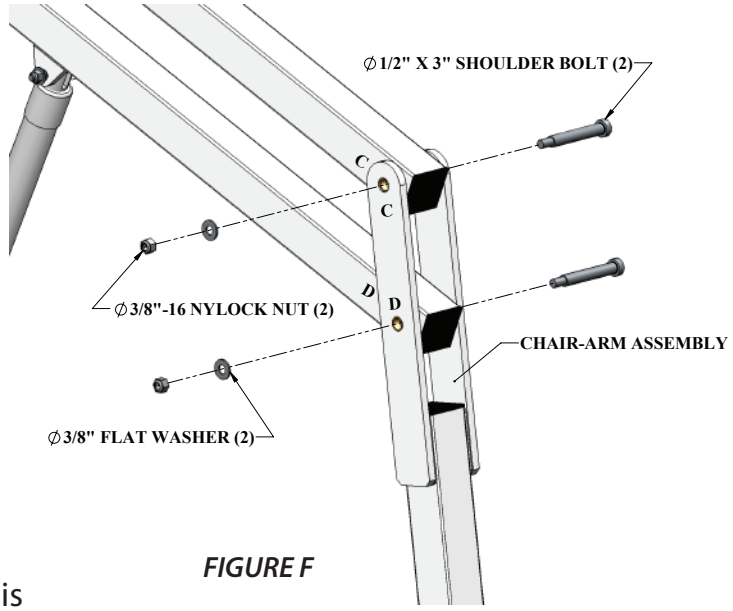

FIGURE F

5. Remove the fully charged BATTERY from the charger and install the battery to the control bracket, on top of the control box. Once secure, connect the battery cable to the control box cable. The lift will only operate when the battery is connected properly.

WHEN LIFT IS NOT IN SERVICE, STORE BATTERY ON THE CHARGER!

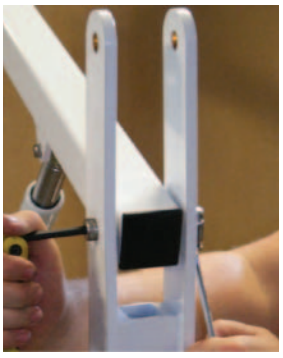

PHOTO 4

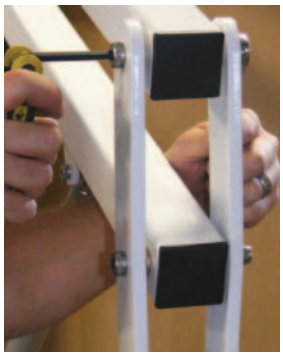

PHOTO 5

Copyright © 2016 Aqua Creek Products All Rights Reserved

Scout 2 Assembly Instructions (cont.)

6. The CHAIR ASSEMBLY will arrive attached to the CHAIR ARM adjusted to its highest position. To adjust the CHAIR ASSEMBLY to a lower position remove the hardware as shown in FIGURE G. Slide the SEAT ASSEMBLY to its desired position (in 4" increments) and reinstall the hardware. The maximum adjustment is 16".

DO NOT ATTACH THE CHAIR ASSEMBLY ANY LOWER THAN THE BOTTOM **TWO** HOLES – ALWAYS USE THE TWO (2) SUPPLIED HEX BOLTS TO ATTACH THE CHAIR ASSEMBLY TO THE CHAIR ARM!

NOTE: For most applications the seat will be installed in its lowest position. For applications where a wall or curb must be cleared the seat should be installed in a higher position. In its highest position, the seat will clear a 18" [457mm] high wall with a footrest and a 28" [711mm] high wall with a legrest.

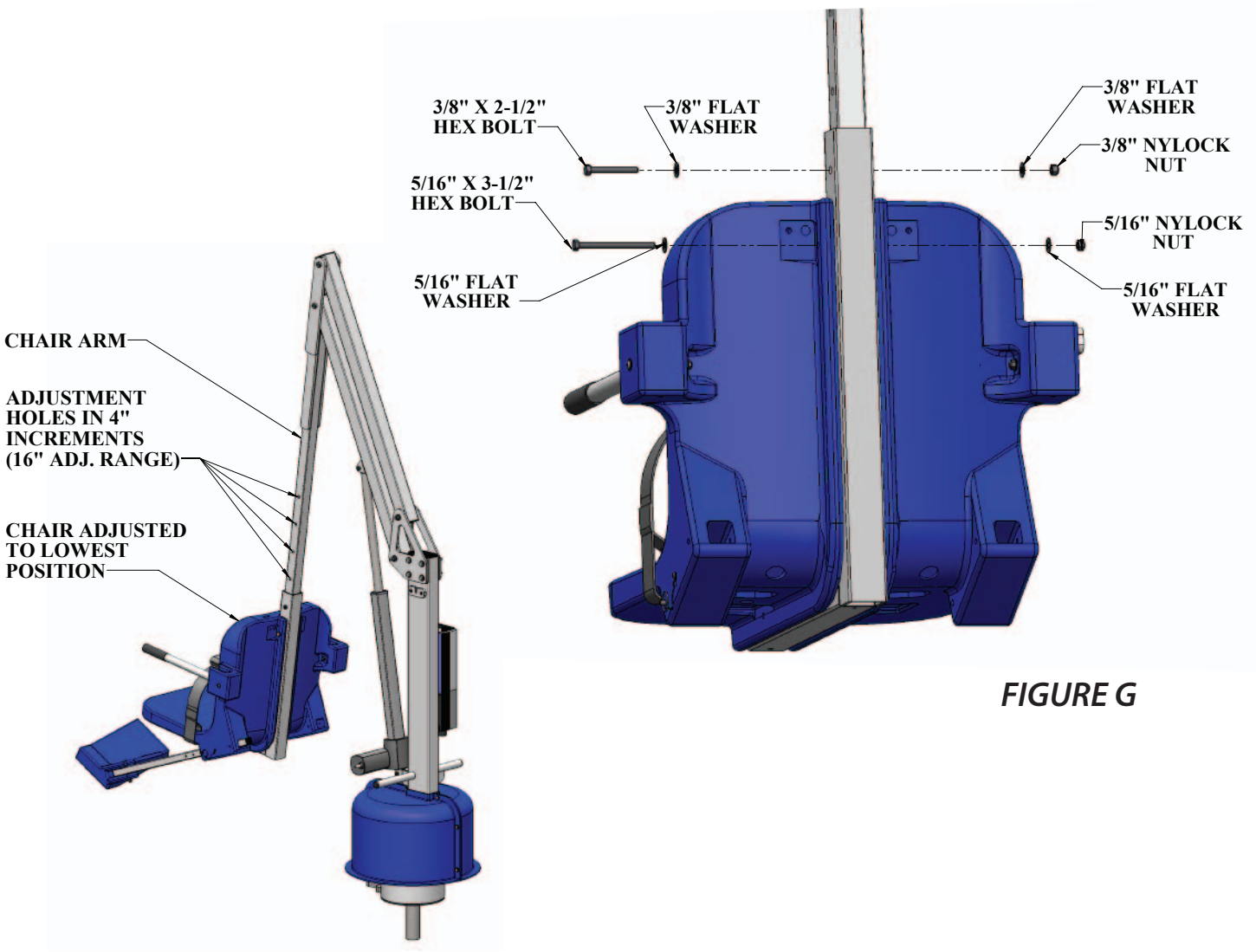

FIGURE G

Copyright © 2016 Aqua Creek Products All Rights Reserved

Basic Troubleshooting

Problem: **The lift won't move.**

Solution:

1. Make sure the battery is properly seated:

You should hear a click when the battery is properly seated on the control box or charger.

NOT Properly Attached:
Note: the white bracket is in front of the silver clip, which will not allow for an electrical connection

Properly Attached:
Note: the white bracket is behind the silver clip, holding it securely to allow for an electrical connection

2. Make sure the cords are properly plugged in:

NOT Properly Inserted:
The cord plug is flush with or sticking out of the outlet

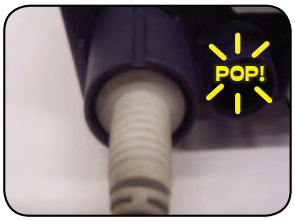

Properly Inserted:
The cord plug is recessed into the outlet

Check the ends of the cords for corrosion or damage. The cord plugs should be recessed into the outlet. You should feel them pop into place when they are correctly inserted.

3. Check the contact points:

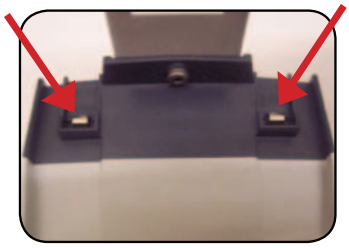

Make sure the contact points of the control box and the battery are not damaged or corroded. If there is corrosion clean with Scotch-Brite™ pad. Put some dielectric grease on the contact points before reattaching the battery.

4. Make sure the battery is fully charged:

The Charger is ON when the green light is glowing

The Battery is CHARGING when the orange light is glowing

When the Battery is charged the orange light will stop glowing

Problem: **The lift stopped moving over the water and is stuck.**

Solution:

1. Press the emergency button

Use a pen or pencil tip and stick it into the emergency button on the front of the control box to retract the lift.

Note: the lift will not retract if the battery is not fully charged or if the control box is not working. The emergency button only overrides the remote handset.

Copyright © 2016 Aqua Creek Products All Rights Reserved

Proper Care of Pool & Spa Lifts

PROCEDURE	DAILY	WEEKLY	MONTHLY
Wash down lift with fresh water and dry with clean, soft, non-abrasive cloth.	✓		
Recharge battery.	✓		
Run the lift through a complete test cycle to verify it is functioning properly.	✓		
Visually inspect lift for damage, corrosion, and loose or missing hardware.	✓		
Check all contact points for damage and/or corrosion.		✓	
Repair, clean, and apply dielectric grease to all contact points.		✓	
Thoroughly clean lift frame and apply a liberal coat of car wax to maintain the lift's finish.			✓
Check all Warning and Cautionary labels to make sure they are not faded or worn. Replace as needed.			✓

PROPER CARE NOTES

- ***Use only fresh water to wash your lift. Do not wash with pool water.***
- **Use only clean, soft, non-abrasive cloths to wipe down your lift.**
- **Do not store lift in pump room or near chemicals.**
- **Do not allow children to play on or around this lift.**
- **When cleaning the lift, do not spray water directly on control box or battery.**
- **The lift may need to be bonded according to local code requirements.**

STAIN REMOVAL TIPS:

To remove stubborn stains from finish, spray affected area with Mild Dish Soap, rub briskly with a 3M Scotch Brite™ pad. Use white epoxy paint to touch up the finish. Apply wax to protect when dry.

For service and/or replacement parts contact Aqua Creek direct at
Toll free: (888) 687-3552

Copyright © 2016 Aqua Creek Products All Rights Reserved

Scout 2 Parts List

ITEM #	QTY	PART #	DESCRIPTION
1	1	SCT-110-40	SCOUT BASE GEAR
2	1	P-920	SHROUD, PLASTIC, SCOUT
3	1	SCT-200-60	SCOUT BASE ASSEMBLY, 2ND ANCHOR
4	1	SCT-310-10	SCOUT MOTOR PLATE
5	1	SCT-400-45	SCOUT MAST ASSEMBLY
6	1	SCT-500-00	SCOUT LIFTING ARM ASSEMBLY
7	1	SCT-600-00	SCOUT CONTROL ARM ASSEMBLY
8	1	SCT-700A-00, REV-800-20	SCOUT ADJ CHAIR ARM & CHAIR CRADLE
9	1	SA-0904CA-A	18" CHAIR ASSEMBLY
10	1	F-0904FRA2	FOOTREST, BLUE
11	1	F-41CBJ	CONTROL BOX, 2-PORT
12	1	F-004AB	BATTERY, 24V BATTERY
13	1	MBJ2-01	BRACKET, MOUNTING, T SHAPED
14	1	VT-1000 400MM	ACTUATOR, 400MM STROKE, PUSH, VITO
15	1	60ZY105-2415	SCOUT ROTATE MOTOR
16	1	SCT-320-20	GEAR, SCOUT MOTOR GEAR
17	1	F-104JH	REMOTE, 4 BUTTON
18	1	F-044CH	CHARGER, FOR 24V BATTERIES
19	1	P-1208HSB	BRACKET, PLASTIC, HANDSET BRACKET
20	1	BOLT, 10-24 X 1/2 LPCS	BOLT, 316 SS, 10-24 X 1/2 LPCS
21	4	BOLT, 5 X 200 FHSCS	BOLT, 316 SS, 5 X 200 FHSCS
22	1	SSE 1/4 X 3/8	SCREW, 316 SS, 1/4"-20 X 3/8", SET SCREW
23	2	BC 1/4 X 3/4	BOLT, 316 SS, 1/4-20 X 3/4 FHSCS
24	7	BH 1/4 X 1	BOLT, 316 SS, 1/4-20 X 1 HCS
25	18	WF 1/4	WASHER, FLAT, 1/4, 316 SS
26	11	NN 1/4	NUT, 316 SS, NYLOCK, 1/4"-20
27	1	BS 3/8 X 1-1/4 18-8	BOLT, 18-8 SS, 3/8 X 1 1/4 SHOULDER
28	1	BS 3/8 X 2 18-8	BOLT, 18-8 SS, 3/8 X 2 SHOULDER
29	4	BH 3/8 X 3-1/2	BOLT, 316 SS, 3/8-16 X 3 1/2 HCS
30	10	WF 3/8	WASHER, FLAT, 3/8, 316 SS
31	8	NN 3/8	NUT, 316 SS, NYLOCK, 3/8"-16
32	1	BH 5/16 X 4	BOLT, 316 SS, 5/16-18 X 4 HCS
33	4	WF 5/16	WASHER, FLAT, 5/16, 316 SS
34	2	NN 5/16	NUT, 316 SS, NYLOCK, 5/16"-18
35	2	BS 1/2 X 2-3/4 18-8	BOLT, 18-8 SS, 1/2 X 2 3/4 SHOULDER
36	2	BS 1/2 X 3 18-8	BOLT, 18-8 SS, 1/2 X 3 SHOULDER
37	1	WF 3/4	WASHER, FLAT, 3/4, 316 SS
38	1	NH 3/4	NUT, 316 SS, HEX, 3/4"-10
39	1	BRB SS-1216-4	BUSHING, BRONZE SLEEVE, 3/8 X 1/2 X 1/4
40	2	BRB SS-1216-6	BUSHING, BRONZE SLEEVE, 1/2 X 3/8 X 3/8
41	8	BRB SS-1620-6	BUSHING, BRONZE SLEEVE, 1/2 X 5/8 X 3/8
42	8	BRB FB-810-5	BUSHING, BRONZE FLANGE, 1/2 X 5/8 X 5/8 X 3/32
43	1	LM12749/12710	LOWER ROLLER BEARING
44	1	LM48548/48510	BEARING, RACE, ASSEMBLY, SCOUT 1.38" SHAFT
45	1	F-BCC10-C	COVER, BATTERY/CONTROL BOX

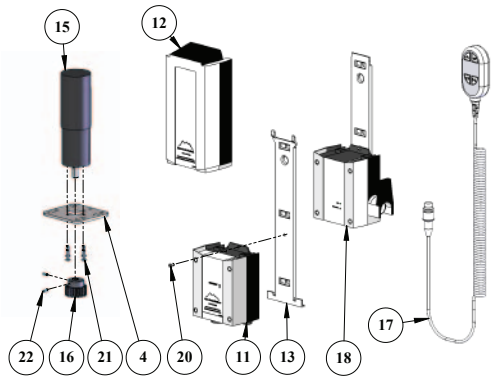

ELECTRIC COMPONENTS

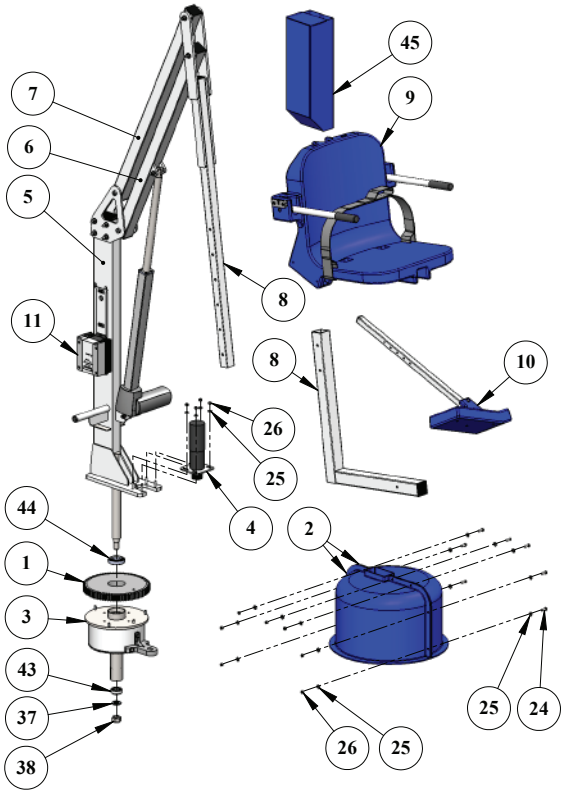

MAIN COMPONENTS

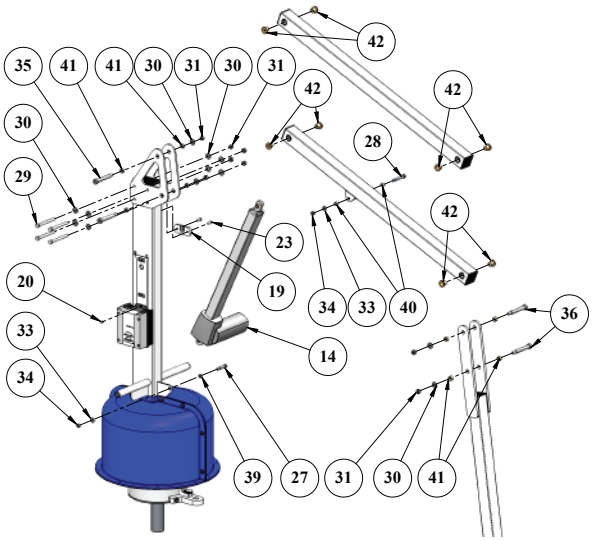

HARDWARE

Copyright © 2016 Aqua Creek Products All Rights Reserved

Seat Assembly Parts List

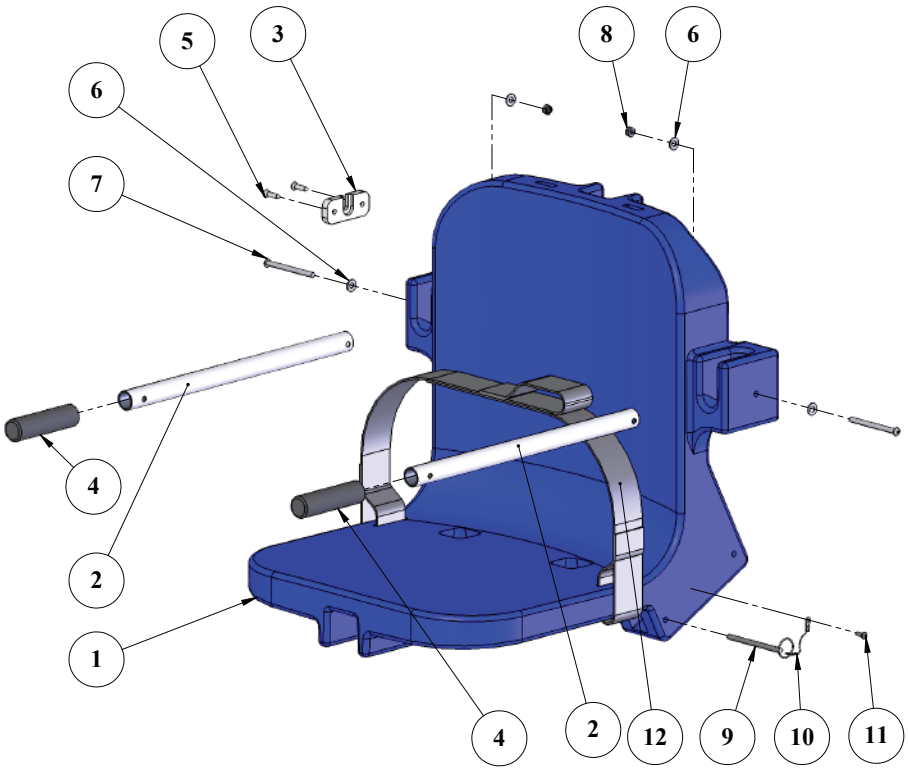

ITEM #	QTY	PART #	DESCRIPTION
1	1	P-901	CHAIR, PLASTIC, 18" BLUE
2	2	P-2100FLA-38	CHAIR II ARMREST TUBE
3	1	P-1208HSB	BRACKET, PLASTIC, HANDSET BRACKET
4	2	RUBBER HAND GRIPS	GRIP, RUBBER HAND GRIP
5	2	SFL 12 X 3/4	SCREW, 316 SS, #12 X 3/4", FHSMS
6	4	WF 1/4	WASHER, FLAT, 1/4, 316 SS
7	2	BB 1/4 X 3-1/4	BOLT, 316 SS, 1/4-20 X 3 1/4 BHSCS
8	2	NN 1/4	NUT, 316 SS, NYLOCK, 1/4"-20
9	1	COTTER PIN, 1/4 X 3 1/4	PIN, COTTERLESS PIN, 18-8 SS, 1/4 X 3 3/4
10	1	LANYARD	LANYARD, FOR FOOTREST PIN, SS
11	1	SPH 10 X 3/4	SCREW, 316 SS, #10 X 3/4", PHSMS
12	1	F-38SB	SEATBELT, 2" WIDE W/ VELCRO

Copyright © 2016 Aqua Creek Products All Rights Reserved

AQUA CREEK PRODUCTS, LLC LIMITED FIVE (5) YEAR WARRANTY: SCOUT POOL LIFT (ITEM #'s F-800SC2, F-802SC2, F-802SC2-EU)

Aqua Creek Products, LLC (a.k.a. Aqua Creek) also warrants to the original end user purchaser that products manufactured by Aqua Creek, when properly installed in accordance with assembly and installation instructions, and properly used and maintained, shall be free from defects in material and workmanship for a period of five (5) years from the date of original purchase, provided that Aqua Creek receives prompt notice in writing of any defect or failure and satisfactory proof thereof, with the following exception(s):

Exceptions:

- **All electrical components, including the linear actuator shall have the following warranty period:**
  - **o Year 1-2: 100% Coverage**
  - **o Year 3: 60% Coverage (Customer is responsible for 40% of replacement cost)**
  - **o Year 4: 50% Coverage (Customer is responsible for 50% of replacement cost)**
  - **o Year 5: 40% Coverage (Customer is responsible for 60% of replacement cost)**
- **Hydraulic actuators and mesh slings shall have a warranty period of one (1) year from the date of original purchase.**
- **Powder coat finish scratches, scrapes, corrosion, or dents from customers normal use, negligence, or abuse**

This warranty specifically excludes reimbursement for labor to remove, repair, or install the product and any return freight charges. These warranties do not cover any damages due to accident, misuse, abuse, negligence or failure to properly maintain any products, or normal wear and tear from day to day operations. In the event that any products are altered, repaired, or improperly installed or improperly used by anyone without the prior written approval by Aqua Creek, all warranties are void. IMPORTANT: AMOUNT OF WEIGHT PLACED ON LIFT SHALL NOT EXCEED THE RATED LIFTING CAPACITY FOR THE LIFT. NEVER OPERATE THE LIFT UNDER LOAD IN A DRY POOL (WITH NO WATER IN THE POOL). It is the responsibility of the lift owner to verify the weight of the patron for warranty claim purposes and to ensure that the lift is not overloaded. Non-payment for product to Aqua Creek may void warranty.

To initiate a warranty claim, the owner of an Aqua Creek product must provide the place of purchase, in writing, with a full description of the product, its serial number, the dates of purchase and installation, and the exact nature of the defect. Within thirty (30) days after receipt of a written warranty claim by Aqua Creek, and barring any unforeseen delays, the place of purchase will be notified of Aqua Creek's decision regarding the claim.

If requested by Aqua Creek, any defective product must be returned, freight prepaid, to Aqua Creek's designated factory location or duly appointed distributor for inspection and/or repair. Aqua Creek will, at its option, repair or replace the failed or defective item, and deliver the repaired product or replacement to the buyer of the product, freight prepaid to the destination provided for in the original order. Products returned to Aqua Creek for which Aqua Creek provides replacement under this limited warranty shall become the property of Aqua Creek. A new warranty period shall NOT be established for the repaired or replaced products. Such products shall remain under warranty only for the remainder of the original warranty period on the original products purchased.

This written limited warranty constitutes the final, complete and exclusive statement of warranty terms. No person or organization is authorized to make any other specific or implied warranties or representations on behalf of Aqua Creek.

THE WARRANTIES SET FORTH HEREIN ARE IN LIEU OF ALL OTHER WARRANTIES, EXPRESSED OR IMPLIED, WHICH ARE HEREBY DISCLAIMED AND EXCLUDED, INCLUDING WITHOUT LIMITATION ANY WARRANTY OF MERCHANTABILITY OR FITNESS FOR A PARTICULAR PURPOSE OR USE.

THE SOLE AND EXCLUSIVE REMEDIES FOR BREACH OF ANY AND ALL WARRANTIES WITH RESPECT TO THE PRODUCTS SHALL BE LIMITED TO REPAIR OR REPLACEMENT AT AQUA CREEK'S DESIGNATED FACTORY LOCATION, OR DULY APPOINTED DISTRIBUTOR, OR IN PLACE AT AQUA CREEK'S OPTION. IN NO EVENT SHALL AQUA CREEK'S LIABILITY EXCEED THE ENTIRE AMOUNT PAID TO AQUA CREEK BY THE ORIGINAL PURCHASER FOR THE FAILED OR DEFECTIVE PRODUCT.

IN NO EVENT SHALL AQUA CREEK PRODUCTS, LLC BE LIABLE FOR ANY INCIDENTAL, CONSEQUENTIAL, SPECIAL, INDIRECT, PUNITIVE OR EXEMPLARY DAMAGES OR LOST PROFITS FROM ANY BREACH OF THIS LIMITED WARRANTY OR OTHERWISE.

THIS WARRANTY GIVES YOU SPECIFIC LEGAL RIGHTS AND YOU MAY ALSO HAVE OTHER RIGHTS, WHICH MAY VARY FROM STATE TO STATE. SOME STATES DO NOT ALLOW THE EXCLUSION OR LIMITATION OF INCIDENTAL, SPECIAL OR CONSEQUENTIAL DAMAGES, SO SOME OF THE ABOVE LIMITATIONS OR EXCLUSIONS MAY NOT APPLY TO YOU.

Aqua Creek Products, LLC
9889 Garrymore Lane
Missoula, MT 59808
Toll Free: (888) 687-3552
Local/Intnl: (406) 549-0769
www.aquacreek.com

Copyright © 2016 Aqua Creek Products All Rights Reserved

Aqua Creek Products®

The Leaders of Recreation, Fitness and Ability

+1-406-549-0769 | 888-687-3552

sales@aquacreek.com | www.aquacreek.com

COVERS

F-120PPC	Ranger/Pro Pool Pro Pool XR/Patriot Portable Pro Pool
F-450BL-C	Scout
F-720BL-C	Revolution/Titan
F-EZBL-C	EZ/Power EZ
F-440HBC-B	Super Power EZ
F-440EZHSC	EZ/Power EZ (cover w/hardseat option)
F-445SLC-B	Spa/Pro Spa 40 Series
F-445SLC-B	Spa/Pro Spa 40 Series
F-462PS6C	Pro Spa 60 Series
F-450SLEC	Spa Lift Elite
F-450SLECS	Spa Lift Elite (for use with solar charger)
F-450SLUC	Spa Lift Ultra
F-450SLUCS	Spa Lift Ultra (for use with solar charger)

ACCESSORIES & OPTIONS

F-019CA	Cycle Attachment
F-105LAR	Pull-Out Legrest
F-422PLH	Headrest (old Pro Pool)
F-422PLH-2	Headrest (all other lifts)
F-422XR	Headrest (Pro Pool-XR)
F-423CS	Chest Strap
F-705-S2	Wheelchair*
F-734RSA	Spineboard*
F-736HS	Head Immobilizer For Spineboard*
F-730RSA-S2	Gurney*
F-706RLSS	Sling Seat Assembly*

*For Revolution & Titan Only

TRANSPORT CARTS

F-428HT	Ranger/Pro Pool
F-914STC	Pro Pool XR
F-814SCTC	Scout
F-714RTC	Revolution

UPGRADE PACKS

F-004PLBAP	Ranger/Pro Pool + Transport Cart
F-920SAP	Pro Pool XR + Transport Cart
F-800SCAP	Scout
F-700RLAP	Revolution/Titan
F-12PPAP	Patriot/Portable Pro Pool
F-03PEZAP	Power EZ (sling bars, rigid seat sling w/ seat belt, cover, extra battery)
F-190PHBLAP	Super Power EZ (sling bars, rigid seat sling w/seat belt, cover, extra battery)
F-SLEUGK	Spa Lift Elite
F-SLUUGK	Spa Lift Ultra

UPGRADE PACKS INCLUDE**

Lift Cover
Extra Battery
Headrest
Chest Strap

ACCESSORIES